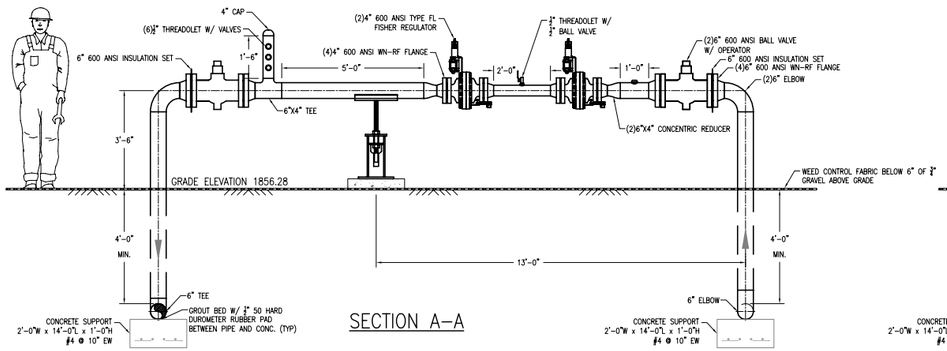

SECTION A–A

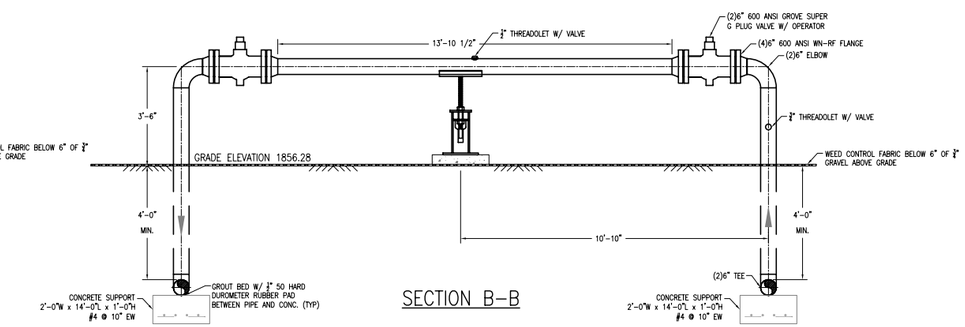

SECTION B–B

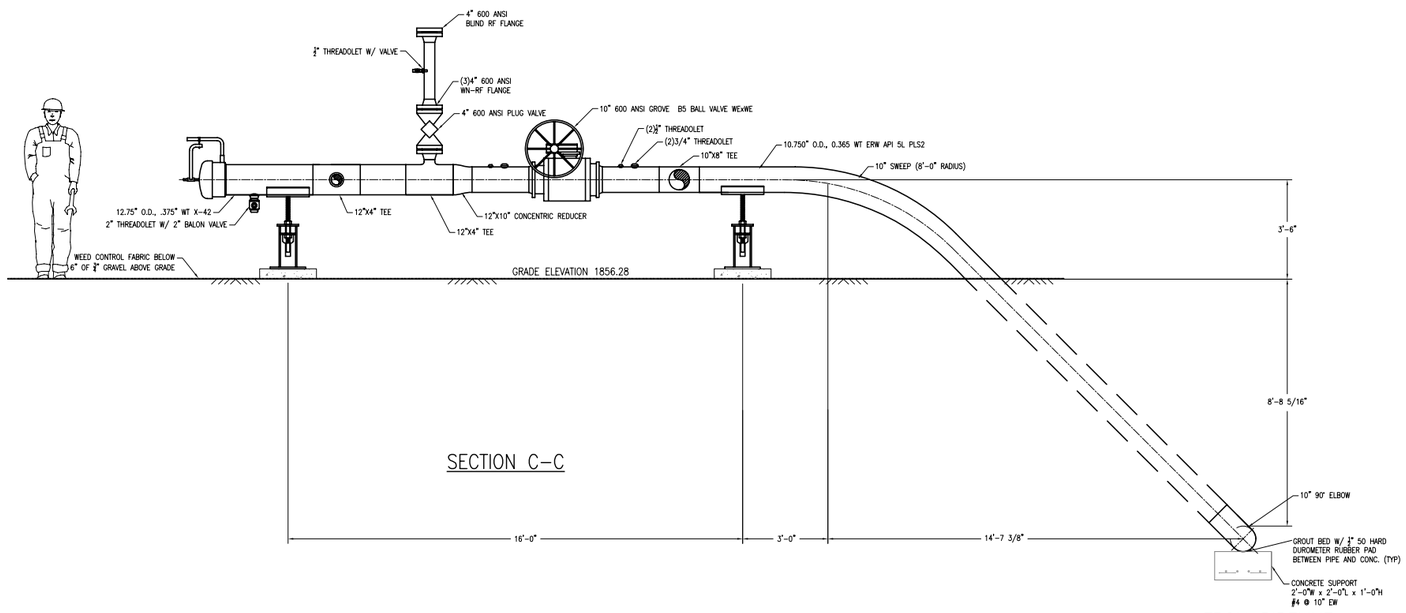

SECTION C–C

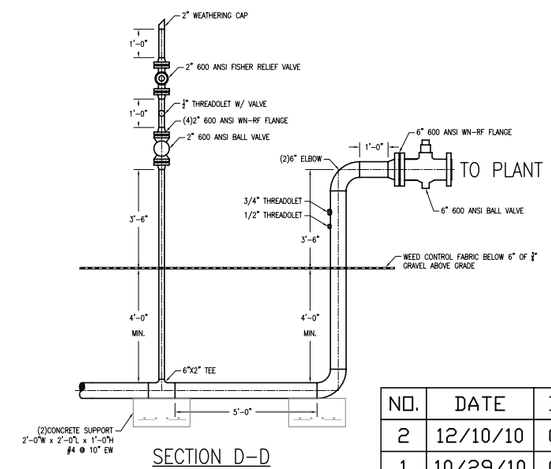

SECTION D–D

NO.	DATE	BY	REVISION
2	12/10/10	GB	REVISED DIMENSIONS
1	10/29/10	GB	AS BUILT-CONCRETE ELEV

BASIN ELECTRIC POWER COOPERATIVE
A Touchstone Energy® Cooperative

MONTANA-DAKOTA UTILITIES CO.
A Division of MDU Resources Group, Inc.

AS BUILT

REGISTERED PROFESSIONAL ENGINEER
REG NO. 9918
DAVID P. YEXLEY
SOUTH DAKOTA

GAS PIPELINE PLANT SITE SECTIONS DEER CREEK STATION

SCALE	DATE	DRAWN BY	APPROVED BY
3/8"=1'	6/2/10	CASSIE PETER	DAVE YEXLEY

DCS-MP-ONG-0006